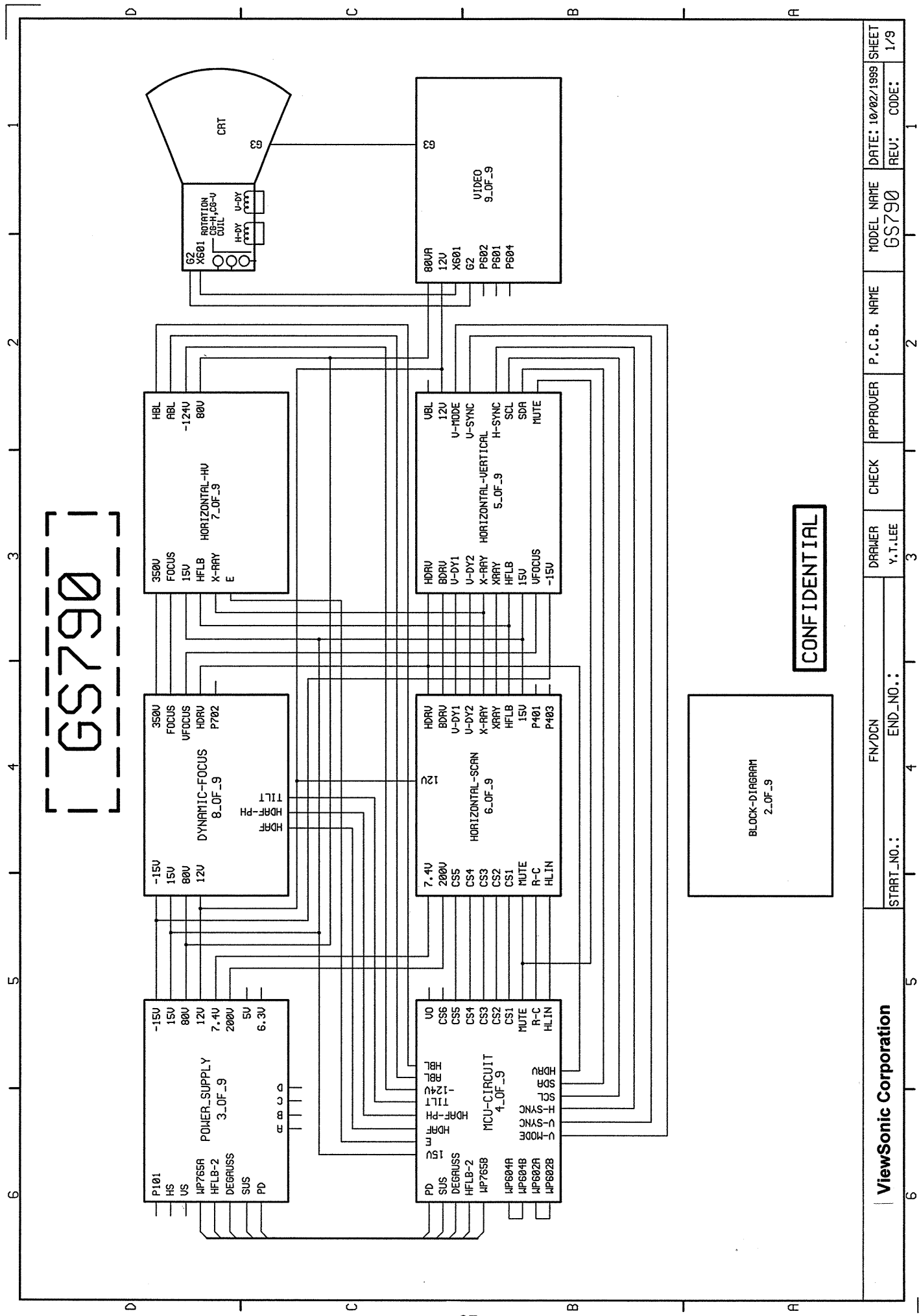
GS790
CRT
G3
G2
X601
ROTATION
CG-H,CG-V
COIL
H-DY
V-DY
VIDEO
9_OF_9
80VA
12V
X601
G2
P602
P601
P604
HORIZONTAL-HV
7_OF_9
HBL
ABL
-124V
80V
350V
FOCUS
15V
HFLB
X-RAY
E
HORIZONTAL-VERTICAL
5_OF_9
VBL
12V
V-MODE
V-SYNC
H-SYNC
SCL
SDA
MUTE
HDRV
BDRV
V-DY1
V-DY2
X-RAY
XRAY
HFLB
15V
VFOCUS
-15V
DYNAMIC-FOCUS
8_OF_9
350V
FOCUS
VFOCUS
HDRV
P702
-15V
15V
80V
12V
TILT
HDRF-PH
HDRF
HORIZONTAL-SCAN
6_OF_9
12V
HDRV
BDRV
V-DY1
V-DY2
X-RAY
XRAY
HFLB
15V
P401
P403
7.4V
200V
CS5
CS4
CS3
CS2
CS1
MUTE
R-C
HLIN
POWER_SUPPLY
3_OF_9
-15V
15V
80V
12V
7.4V
200V
5V
6.3V
P101
HS
VS
WP765A
HFLB-2
DEGAUSS
SUS
PD
MCU-CIRCUIT
4_OF_9
VO
CS6
CS5
CS4
CS3
CS2
CS1
MUTE
R-C
HLIN
HDRV
SDA
SCL
H-SYNC
V-SYNC
V-MODE
TILT
-124V
RBL
HBL
HDRF-PH
HDRF
15V
PD
SUS
DEGAUSS
HFLB-2
WP765B
WP604A
WP604B
WP602A
WP602B
BLOCK-DIAGRAM
2_OF_9
CONFIDENTIAL
ViewSonic Corporation
START_NO.:
END_NO.:
FN/DCN
DRAWER
Y.T.LEE
CHECK
APPROVER
P.C.B. NAME
MODEL NAME
GS790
DATE: 10/02/1999
REV:
CODE:
SHEET
1/9

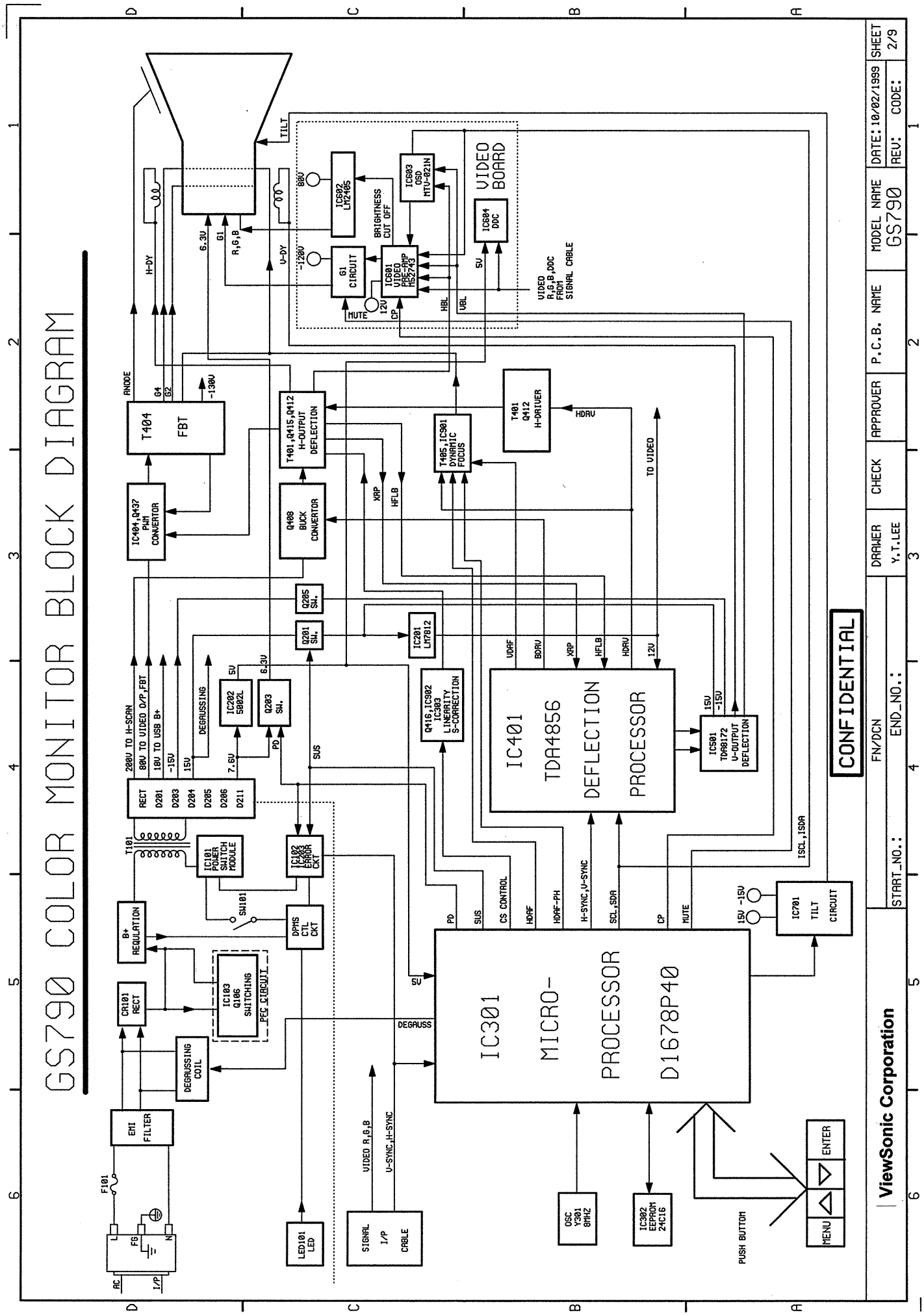
GS790 COLOR MONITOR BLOCK DIAGRAM
VIDEO BOARD
IC602 LM2406
IC603 OSD MTV-021N
IC604 DDC
G1 CIRCUIT
IC601 VIDEO PRE-AMP MS2743
BRIGHTNESS CUT OFF
VIDEO R,G,B,DDC FROM SIGNAL CABLE
T404 FBT
IC404,Q437 PWM CONVERTOR
T401,Q415,Q412 H-OUTPUT DEFLECTION
T401 Q412 H-DRIVER
T405,IC501 DYNAMIC FOCUS
Q408 BUCK CONVERTOR
Q205 SW.
Q201 SW.
IC201 LM7812
IC202 5902L
Q203 SW.
Q416,IC302 IC303 LINEARITY S-CORRECTION
IC401 TDA4856 DEFLECTION PROCESSOR
IC501 TDA8172 V-OUTPUT DEFLECTION
RECT D201 D203 D204 D205 D206 D211
T101
IC101 POWER SWITCH MODULE
IC102 IC203 ERROR CKT
SW101
DPMS CTL CKT
B+ REGULATION
CR101 RECT
IC103 Q106 SWITCHING
PFC CIRCUIT
DEGAUSSING COIL
EMI FILTER
F101
IC301 MICRO-PROCESSOR D1678P40
IC701 TILT CIRCUIT
LED101 LED
SIGNAL I/P CABLE
OSC Y301 8MHZ
IC302 EEPROM 24C16
PUSH BUTTON
MENU
ENTER
200V TO H-SCAN
80V TO VIDEO O/P,FBT
18V TO USB B+
-15V
15V
DEGAUSSING
VIDED R,G,B
V-SYNC,H-SYNC
ISCL,ISDA
CONFIDENTIAL
FN/DCN
START_NO.:
END_NO.:
DRAWER Y.T.LEE
CHECK
APPROVER
P.C.B. NAME
MODEL NAME GS790
DATE: 10/02/1999
REV:
CODE:
SHEET 2/9
ViewSonic Corporation

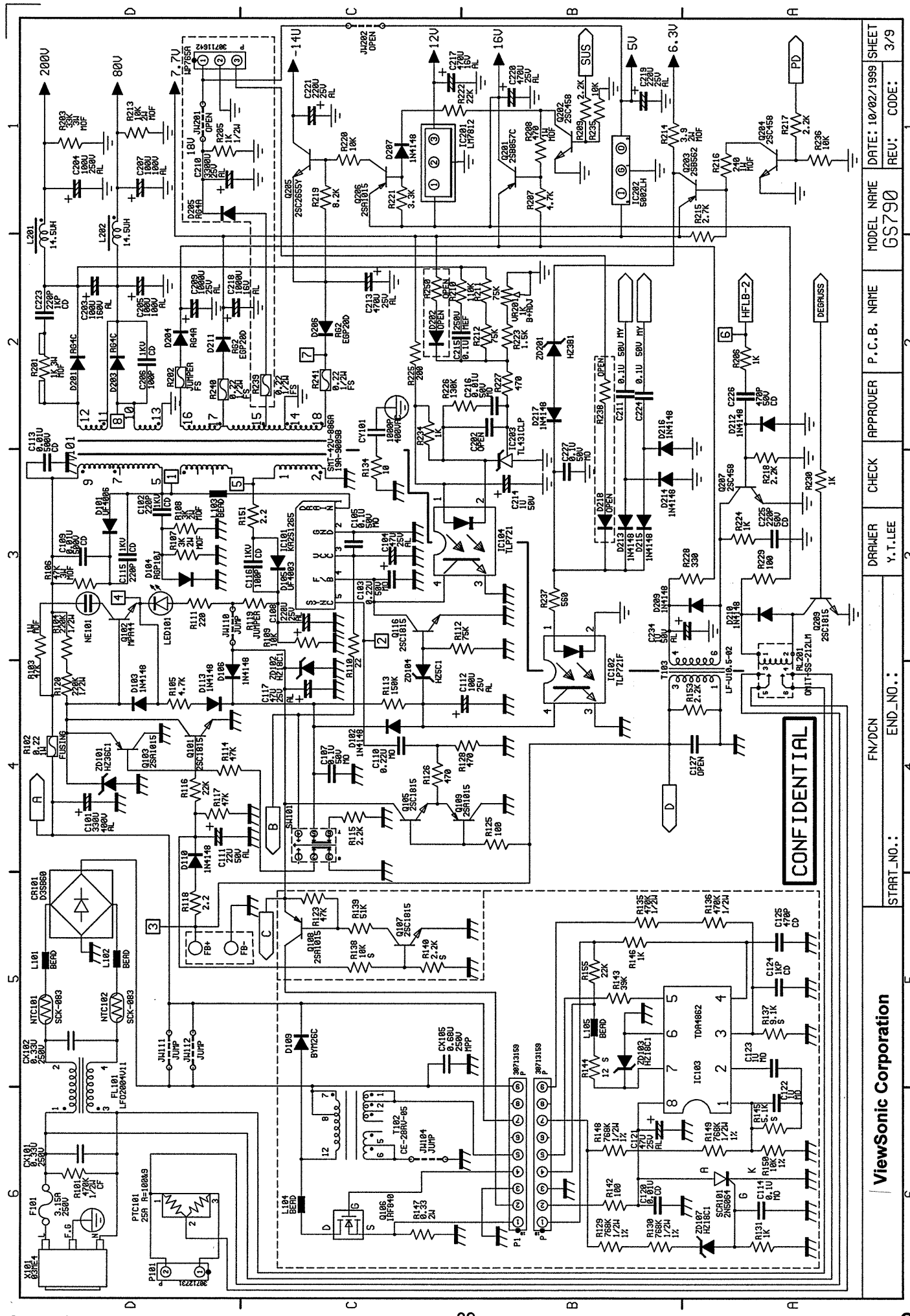
CONFIDENTIAL
ViewSonic Corporation
MODEL NAME
GS790
DATE: 10/02/1999
SHEET 3/9
REV:
CODE:
P.C.B. NAME
APPROVER
CHECK
DRAWER
Y.T.LEE
FN/DCN
START_NO.:
END_NO.:
200V
80V
7.7V
-14V
12V
16V
5V
6.3V
SUS
PD
HFLB-2
DEGAUSS
IC101 KA2S1265
IC103 TDA4862
IC104 TLP721
IC102 TLP721F
IC201 LM7812
IC202 5902LH
IC203 TL431CLP
T101 SHT-420-886A 19A-9809B
T102 CE-28AU-05
T103 LF-U16.5-02
FL101 LFD2004V11
CR101 D3SB60
X101 63TE-4
F101 3.15A 250V
PTC101 25A R-100A9
P101 3071231
P1 3071319
SW101
RL201 OMIT-SS-212LM
FB+
FB-
JU111 JUMP
JU112 JUMP
JU104 JUMP
JU110 JUMP
JU201 OPEN
JU202 OPEN
NTC101 SCK-083
NTC102 SCK-083
L201 14.5UH
L202 14.5UH
L101 BEAD
L102 BEAD
L103 BEAD
L104 BEAD
L105 BEAD
Q106 IRF840
D108 BYM26C
SCR101 2N5064
ZD107 HZ18C1
ZD103 HZ18C1
ZD101 HZ36C1
ZD102 HZ8C1
ZD104 HZ5C1
ZD201 HZ3B1
LED101
NE101
Q102 MPA41
Q103 2SA1015
Q101 2SC1815
Q105 2SC1815
Q109 2SA1015
Q108 2SA1015
Q107 2SC1815
Q116 2SC1815
Q209 2SC1815
Q205 2SC2655Y
Q206 2SA1015
Q201 2SB857C
Q202 2SC458
Q203 2SB562
Q204 2SC458
Q207 2SC458
Q208 2SC458
A
B
C
D

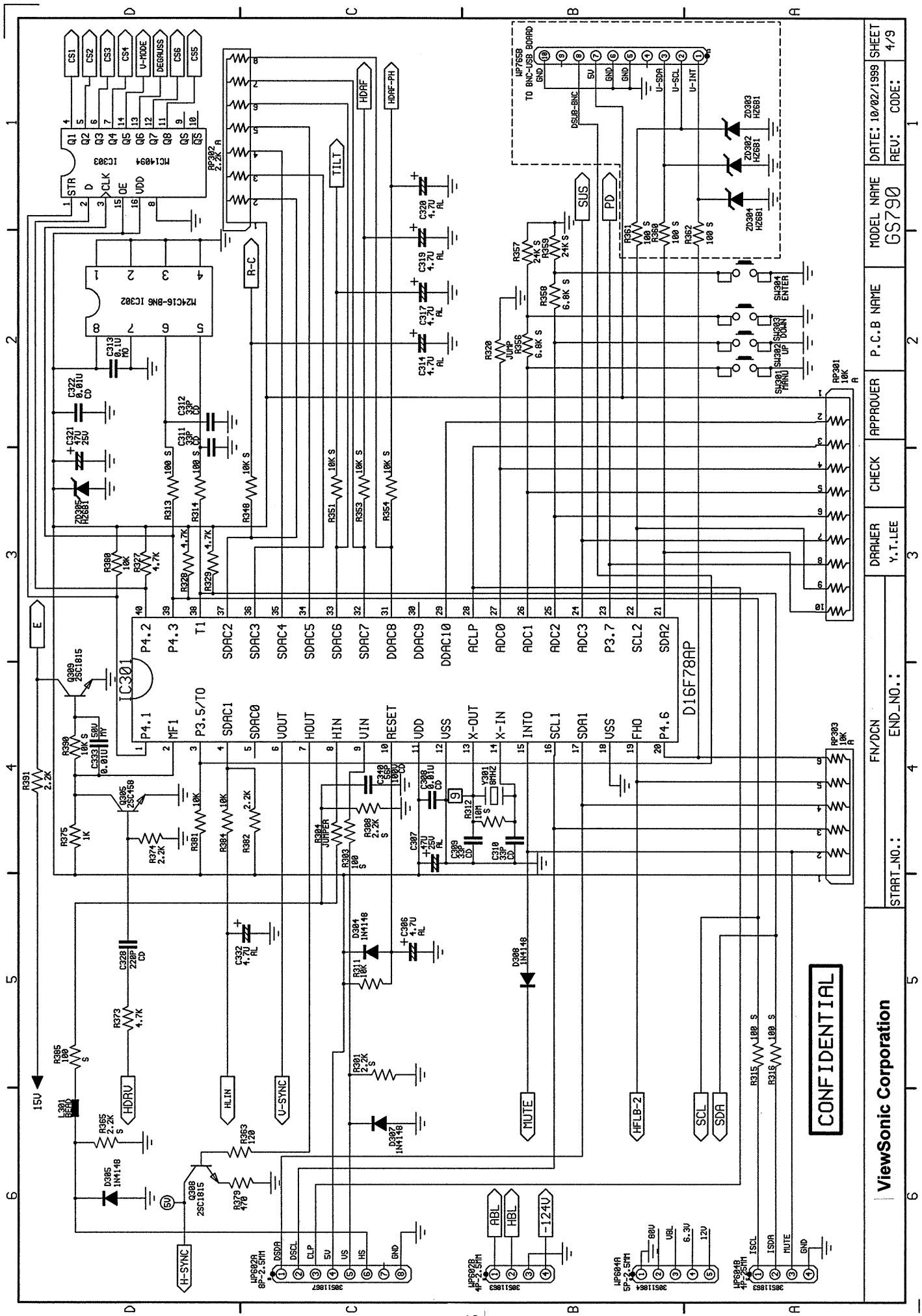
IC301
D16F78AP
IC303
MC14094
IC302
M24C16-BN6
CONFIDENTIAL
ViewSonic Corporation
MODEL NAME
GS790
P.C.B NAME
APPROVER
CHECK
DRAWER
Y.T.LEE
DATE: 10/02/1999
REV:
CODE:
SHEET
4/9
FN/DCN
START_NO.:
END_NO.:

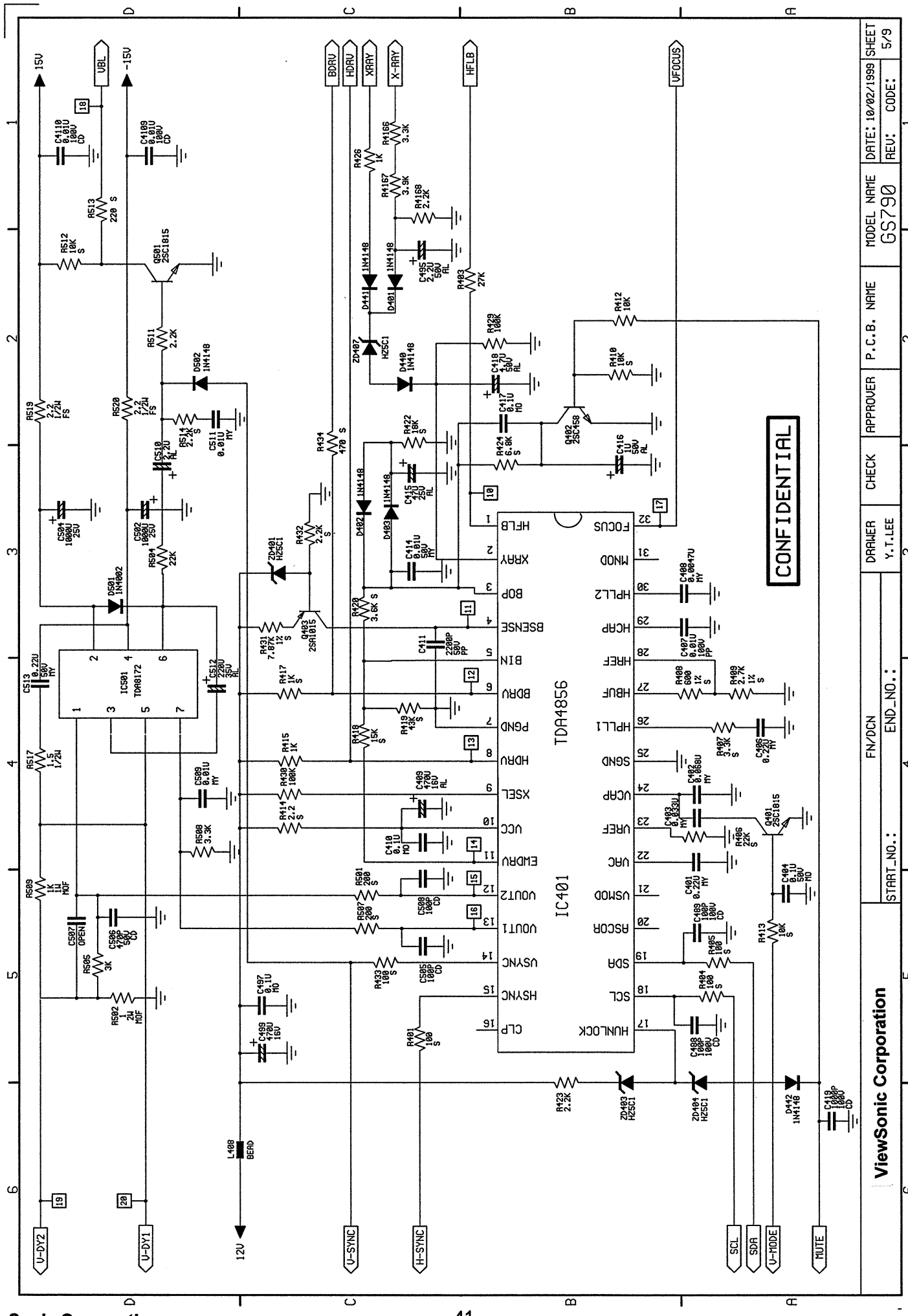
CONFIDENTIAL
IC401
TDA4856
IC501
TDA8172
MODEL NAME
GS790
DATE: 10/02/1999
REV:
CODE:
SHEET
5/9
P.C.B. NAME
APPROVER
CHECK
DRAWER
Y.T.LEE
FN/DCN
START_NO.:
END_NO.:
ViewSonic Corporation
15V
-15V
VBL
BDRV
HDRV
XRAY
X-RAY
HFLB
VFOCUS
V-DY2
V-DY1
12V
V-SYNC
H-SYNC
SCL
SDA
V-MODE
MUTE

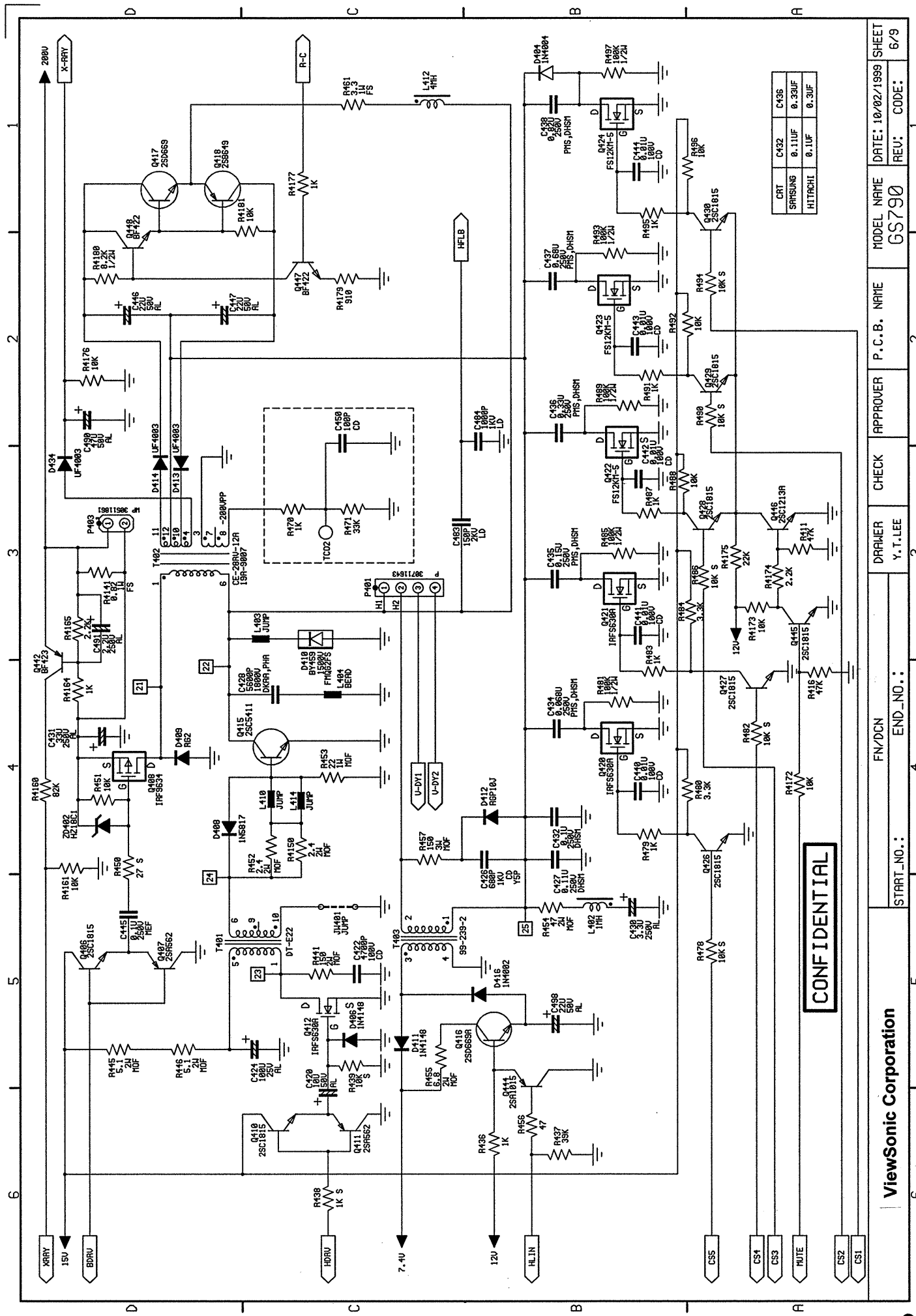
CONFIDENTIAL
ViewSonic Corporation
MODEL NAME GS790
SHEET 6/9
DATE: 10/02/1999
REV: CODE:
P.C.B. NAME
APPROVER
CHECK
DRAWER Y.T.LEE
FN/DCN
END_NO.:
START_NO.:
CRT | C432 | C436
SAMSUNG | 0.11UF | 0.33UF
HITACHI | 0.1UF | 0.3UF
200V
X-RAY
R-C
HFLB
XRAY
15V
BDRV
HDRV
7.4V
12V
HLIN
CS5
CS4
CS3
MUTE
CS2
CS1
V-DY1
V-DY2
TCO2
Q417 2SD669
Q418 2SB649
Q419 BF422
Q447 BF422
Q412 BF423
Q415 2SC5411
Q408 IRF9634
Q406 2SC1815
Q407 2SA562
Q410 2SC1815
Q411 2SA562
Q416 2SD669A
Q411 2SA1015
Q424 FS12KH-5
Q423 FS12KH-5
Q422 FS12KH-5
Q421 IRFS630A
Q420 IRFS630A
Q412 IRFS630A
Q430 2SC1815
Q429 2SC1815
Q428 2SC1815
Q427 2SC1815
Q426 2SC1815
Q446 2SC1213A
Q445 2SC1815
T401 DT-E22
T402 CE-28RU-12A
T403 99-239-2
L402 1MH
L412 4MH
D404 1N4004
D412 RGP10J
D416 1N4002
D411 1N4148
D496 1N4148
D409 1N5817
D410 BY459
D414 UF4003
D413 UF4003
D424 UF4003
D409 RG2
ZD402 HZ18C1
P401
P403
P402

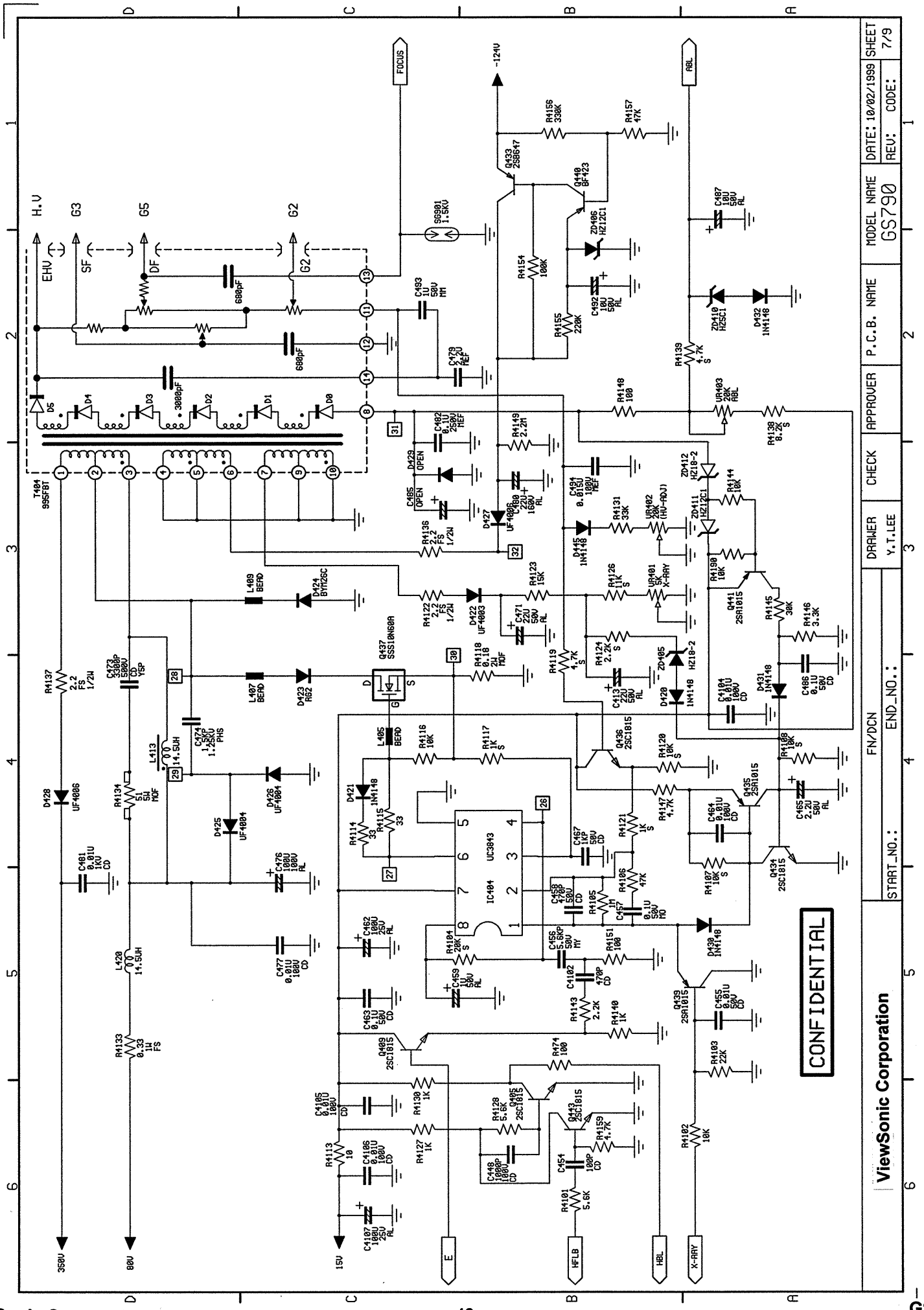
DATE: 10/02/1999
SHEET 7/9
REV: CODE:
MODEL NAME GS790
P.C.B. NAME
APPROVER
CHECK
DRAWER Y.T.LEE
FN/DCN
START_NO.:
END_NO.:
ViewSonic Corporation
CONFIDENTIAL
H.V
G3
G5
G2
EHV
SF
DF
FOCUS
-124V
ABL
T404 995FBT
IC404 UC3843
Q437 SSS10N60A
350V
80V
15V
E
HFLB
HBL
X-RAY

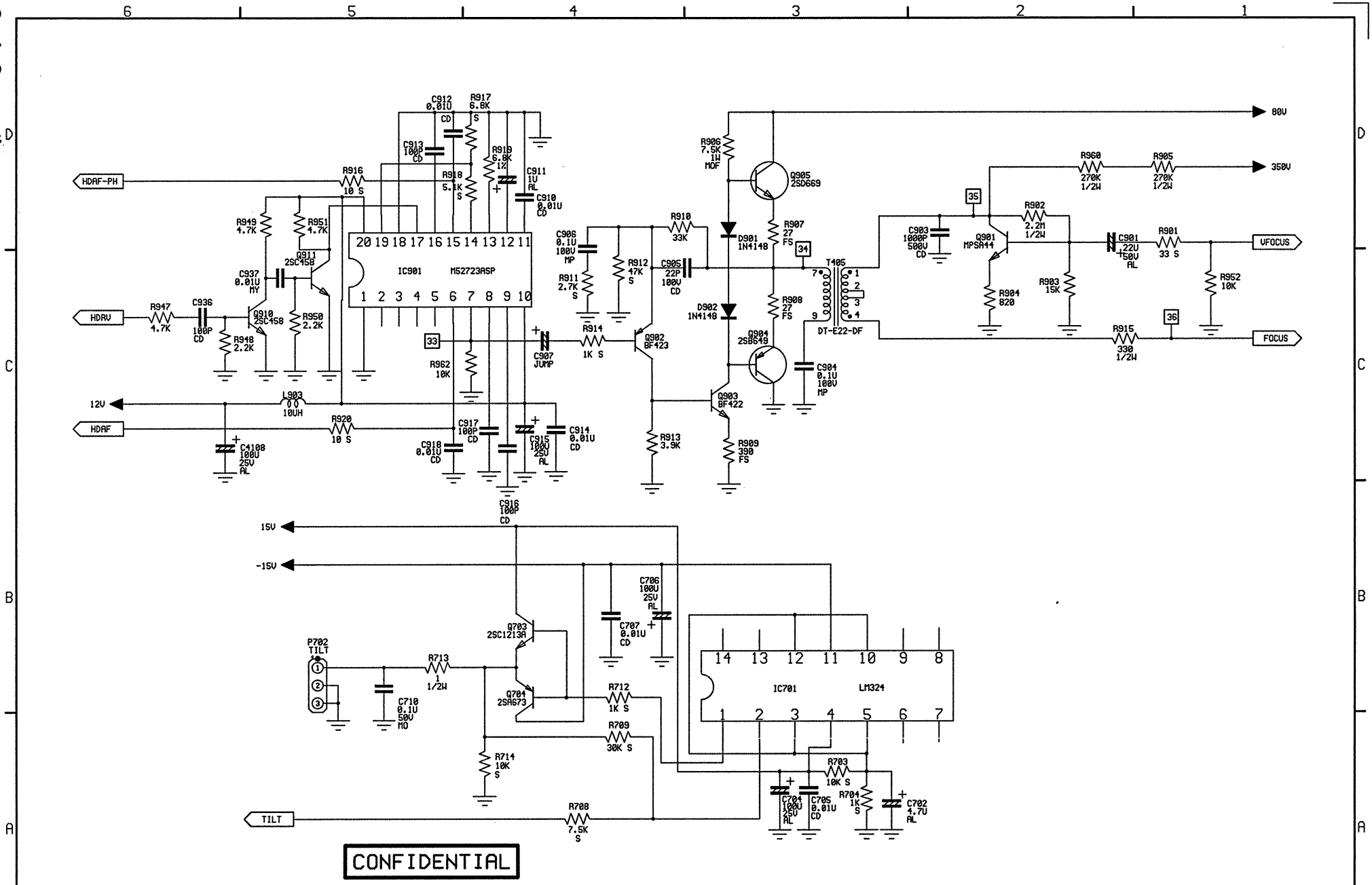

ViewSonic Corporation	FN/DCN START_NO.: END_NO.:	DRAWER Y.T.LEE	CHECK	APPROVER	P.C.B. NAME	MODEL NAME GS790	DATE: 10/02/1999 REV: CODE:	SHEET 8/9

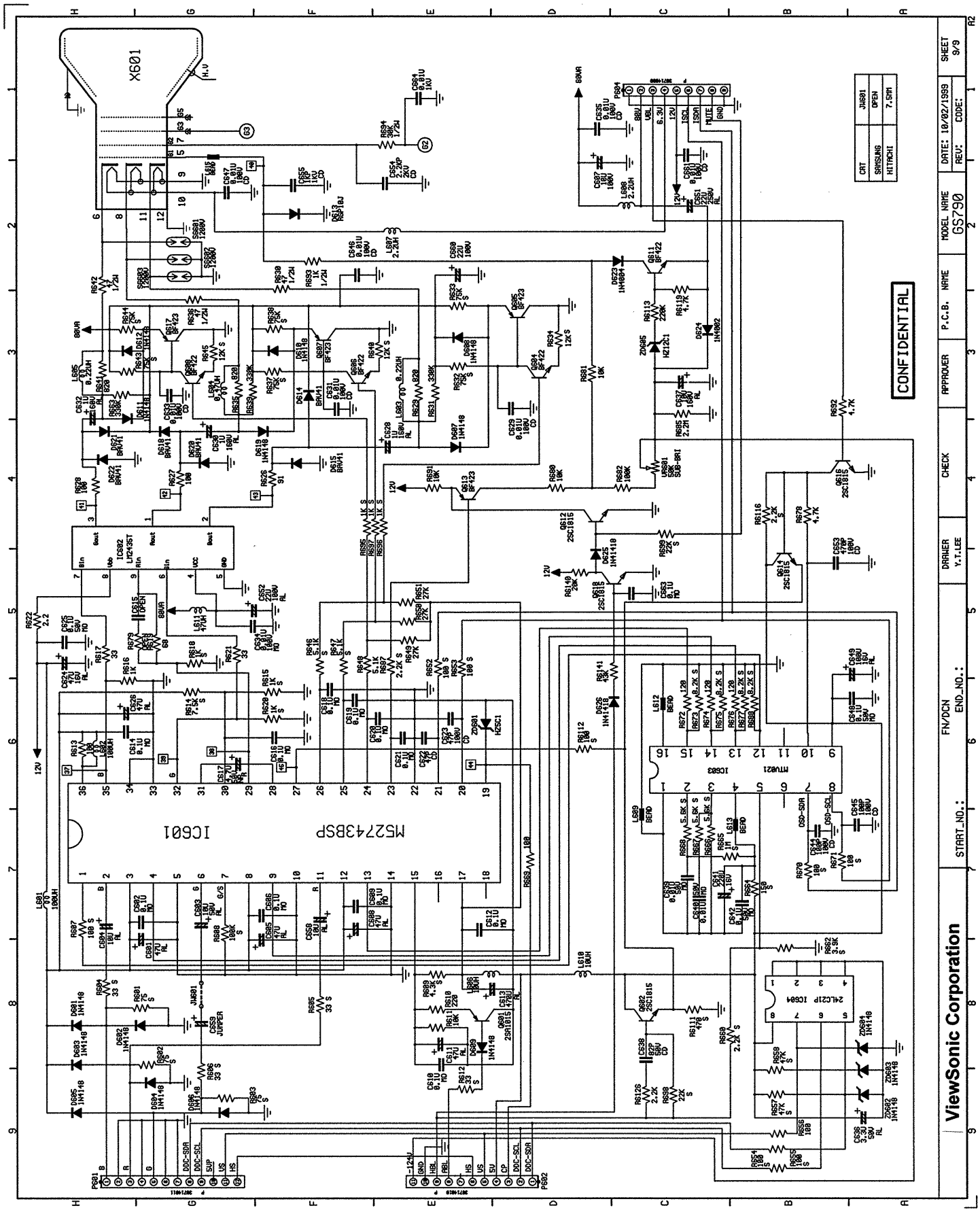
X601
IC601
M52743BSP
IC602
L1243ST
IC603
MTV021
IC604
24LC21P
CONFIDENTIAL
CRT
SAMSUNG
HITACHI
JA601
OPEN
7.5MM
SHEET 9/9
DATE: 10/02/1999
REV:
CODE:
MODEL NAME GS790
P.C.B. NAME
APPROVER
CHECK
DRAWER Y.T.LEE
FN/DCN
END_NO.:
START_NO.:
ViewSonic Corporation